RD198 VW Amarok Rear

PARTS LIST

ITEM #	QTY	DESCRIPTION	PART #	NOTES
01	1	FLANGE CAP KIT	027330SP	
02	1	BONDED SEAL	160702SP	
03	1	CLUTCH GEAR & WAVESPRING KIT	050901SP	
04	1	SPIDER BLOCK	070201SP	
05	1	LONG CROSS SHAFT	060204SP	
06	4	PINION GEAR	SEE NOTE	2
07	4	PINION THRUST WASHER	SEE NOTE	3
08	1	SIDE GEAR	SEE NOTE	2
09	2	SIDE GEAR THRUST WASHER	SEE NOTE	3
10	1	DIFFERENTIAL CASE	013030SP	
11	1	COUNTERSUNK SCREW (PK OF 2)	200213SP	
12	1	RETAINING PIN SET (PK OF 4)	120601SP	
13	-	TAPERED ROLLER BEARING	NOT SUPPLIED	
14	1	SEAL HOUSING BRACKET	220210	
15	1	SEAL HOUSING O-RINGS (PK OF 2)	160248-2	
16	1	SEAL HOUSING KIT	081817SP	1
17	1	WAVESPRING	150701SP	
18	1	SPLINED SIDE GEAR	SEE NOTE	2
*	2	SHORT CROSS SHAFT	060403SP	
*	1	SHIM KIT	SHK008	
*	1	SEAL HOUSING BRACKET	220210	
*	1	BULKHEAD FITTING KIT (BANJO TYPE)	170114	4
*	1	AIR LINE (6mm DIA X 6m LONG)	170314	4
*	1	SOLENOID VALVE (12V)	180103	
*	1	SWITCH|RR LOCKER	180224SP	
*	1	CABLE TIE (PK OF 25)	180305	
*	1	OPERATING & SERVICE MANUAL	210200	
*	1	INSTALLATION GUIDE	2102198	

* *Not illustrated in exploded view*

NOTES

1. For replacement O-rings use only BS140 Viton 75.
2. Available only as complete 6 gear set # 728H051
3. Available only as complete thrust washer kit #730H01
4. All diffs produced before serial #17070001 came with 5mm air connection system. For information contact ARB.

RD198 VW Amarok Rear

EXPLODED DIAGRAM

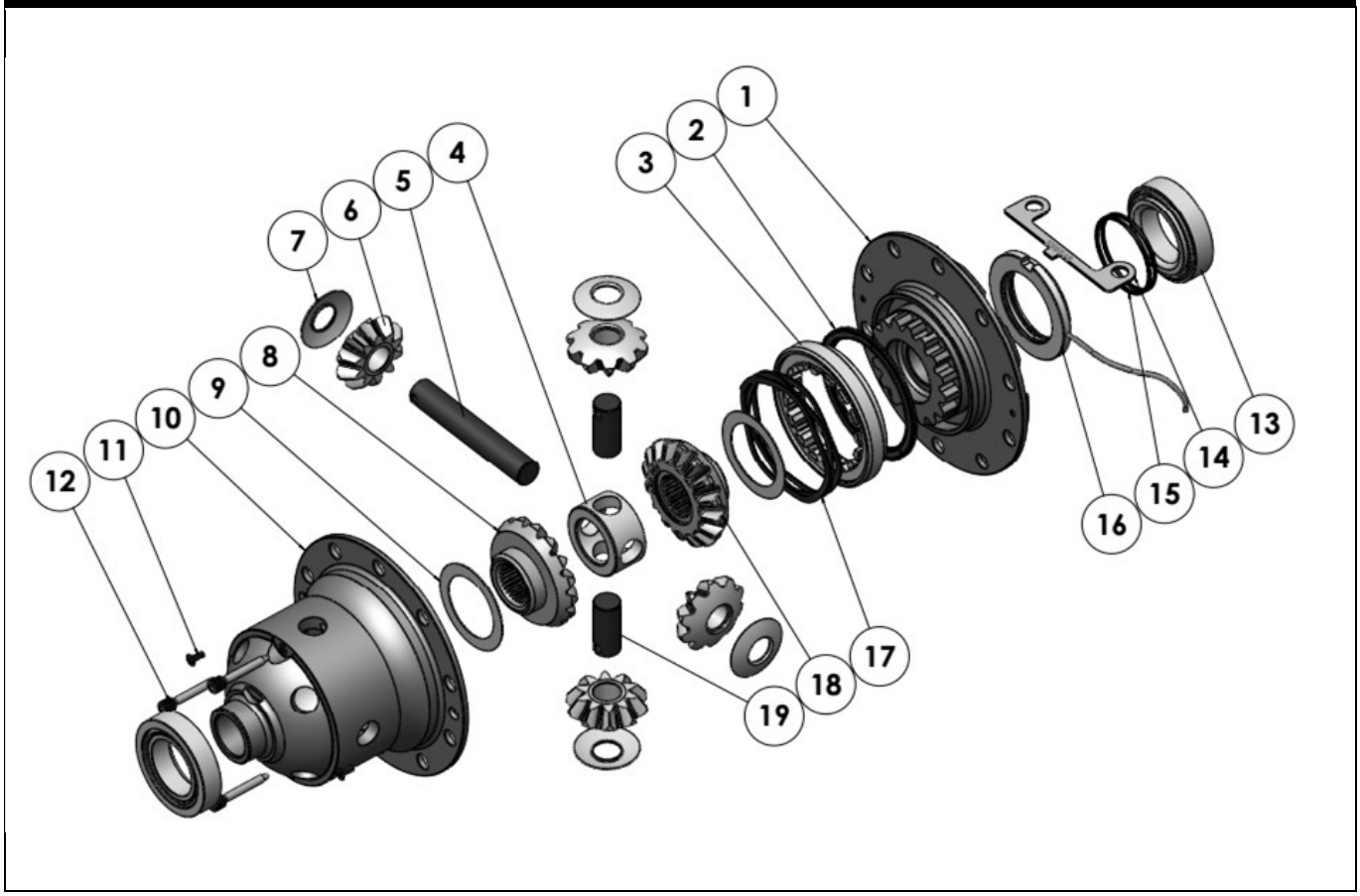

SPECIFICATIONS

Axle Spline	**30 tooth, Ø33.3mm [1.31”]**
Ratio Supported	**All**
Ring Gear ID	**143.4mm [5.64”]**
Ring Gear OD	**226.0mm [8.9”]**
Ring Gear Bolts	**10 bolts on Ø170.0mm [6.69”]**
Ring Gear Torque	**108Nm [80 ft-lb]**
Backlash	**0.12-0.18mm [0.003-0.005”]**
Bearing Cap Torque	**88Nm [65 ft-lb]**

ARB Corporation Ltd ▪ 42-44 Garden St Kilsyth VIC 3137 Australia
ARB 4X4 Accessories USA ▪ 4810 D St. NW #103 Auburn WA 98001 USA
Australia & International Customer Service ▪ +61 3 9761 6622
North America Customer Service ▪ Toll Free 866 293 9078
www.arb.com.au ***(AUS & Int)*** www.arbusa.com ***(N. America)***